Approved - Returned: 12/02/2011

ENTRANCES & EXITS

All entrances and all exterior ground floor exit doors to buildings and facilities shall be made accessible to persons with disabilities in compliance with Sec 1133B.1.1 & 1001.1

Exit doors shall be openable from the inside without the use of a key or any special knowledge or effort. Sec 1008.1.8

Manually operated edge or surface–mounted flush bolts and surface bolts are prohibited. When exit doors are used in pairs and approved automatic flush bolts are used, the door leaf having the automatic flush bolts shall have no doorknob or surface–mounted hardware. The unlatching of any leaf shall not require more than one operation.
Sec 1008.1.8.3 & 1008.1.8.5

Latching and locking doors that are hand activated and which are in a path of travel shall be operable with a single effort by lever type hardware, panic bars, push–pull activating bars, or other hardware designed to provide passage without requiring the ability to grasp the opening hardware. Locked exit doors shall operate as above in egress direction.
Sec 1133B.2.5.2

Hand–activated door opening hardware shall be centered between 30" and 44" above the floor.
Sec 1133B.2.5.2

Minimum maneuvering clearances at doors shall be as shown in Figure 11B–26. The floor or ground area within the required clearances shall be level and clear.
Sec 1133B.2.4.2

There shall be a level and clear floor or landing on each side of a door. The level area shall have a length in the direction of door swing of at least 60" and the length opposite the direction of door swing of 48" as measured at right angles to the plane of the door in the closed position.
Sec 1133B.2.4.2 Fig 11B–26.

The width of the level area on the side to which the door swings shall extend a minimum of 24" past the strike edge of the door for exterior doors and a minimum of 18" past the strike edge for interior doors.
Sec 1133B.2.4.3 Fig 11B–26.

The floor or landing shall be not more than 1/2" lower than the threshold of the doorway.
Sec 1133B.2.4.1 Fig 11B–32.

The bottom 10" of all doors except automatic and sliding shall have a smooth, uninterrupted surface to allow the door to be opened by a wheelchair footrest without creating a trap or hazardous condition. Where narrow frame doors are used, a 10" high smooth panel shall be installed on the push side of the door, which will allow the door to be opened by a wheelchair footrest without creating a trap or hazardous condition.
Sec 1133B.2.6 Fig 11B–29.

Maximum effort to operate doors shall not exceed 5 pounds for exterior doors and 5 pounds for interior doors, such pull or push effort being applied at right angles to hinged doors and at the center plane of sliding or folding doors. Compensating devices or automatic door operators may be utilized to meet the above standards. Where fire doors are required, the maximum effort to operate the door may be increased to the maximum allowable by the appropriate administrative authority, not to exceed 15 pounds.
Sec 1133B.2.5

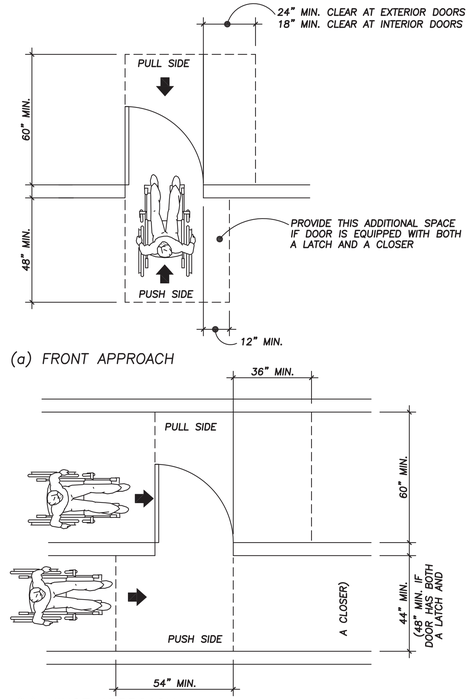

FIGURE 11B-26

GRAB BARS

Grab bars shall be located on each side, or on one side and the back of the accessible toilet stall or compartment.
Sec 1115B.4.3 Fig 11B–1A, B & C.

Grab bars at the side shall be at least 42" long with the front end positioned 24" in front of the water closet stool and with the back end positioned no more than 12" from the rear wall. Grab bars at the back shall be not less than 36" long.
Sec 1115B.4.3 Fig 11B–1A, B & C.

Grab bars shall be securely attached 33" above and parallel to the floor, except that where a tank–type toilet is used which obstructs placement at 33", the grab bar may be as high as 36".
Sec 1115B.4.3.2 Fig 11B–1A.

The diameter or width of the gripping surfaces of a grab bar shall be 1–1/4" to 1–1/2" or the shape shall provide an equivalent gripping surface. If grab bars are mounted adjacent to a wall, the space between the wall and the grab bars shall be 1–1/2".
Sec 1115B.7.1 Fig 11B–1C.

The structural strength of grab bars, tub and shower seats, fasteners, and mounting devices shall meet the following specifications: 250 LBS. IN ANY DIRECTION.
Sec 1115B.7.2

A grab bar and any wall or other surface adjacent to it shall be free of any sharp or abrasive elements. Edges shall have a minimum radius of 1/8".
Sec 1115B.7.3

Tensile force induced in a fastener by a direct tension force of 250–lbs point load, plus the maximum moment from the application of 250–lbs point load, shall be less than the allowable withdrawal load between the fastener and the supporting structure. Sec. 1115B.7.2.4

Grab bars shall not rotate within their fittings. Sec. 1115B.7.2.5

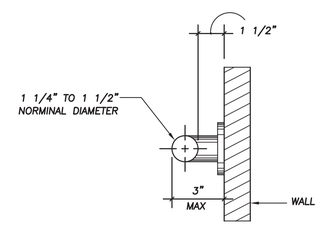

SECTION THROUGH TYPICAL GRAB BAR

FIGURE 11B-1C

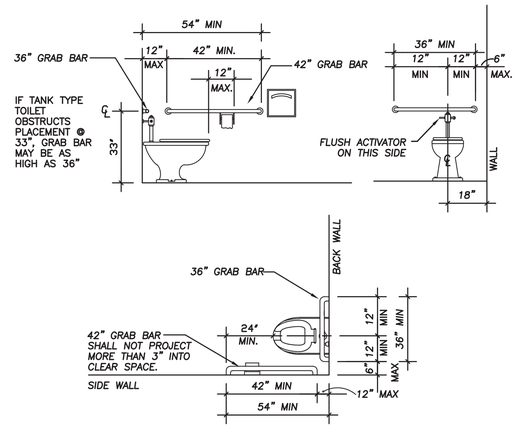

NOTE:
GRAB BAR MAY BE CONTINUOUS FROM BACK TO SIDE WALL.

SANITARY FACILITY FIXTURES & ACCESSORIES

The height of accessible water closets shall be a minimum of 17" and a maximum of 19" measured to the top of a maximum 2" high toilet seat, except that 3" seats shall be permitted only in alterations where the existing fixture is less than 15" high. Sec 1115B4.1.4

A clear floor space 30" by 48" shall be provided in front of a lavatory to allow a forward approach. Such clear floor space shall adjoin or overlap an accessible route and shall extend into knee and toe space underneath the lavatory. A door swing shall not encroach into this clear space. Sec 1115B.4.3.3. Fig 11B–1D.

Lavatories, when located adjacent to a side wall shall be a minimum distance of 18" to the center line of the fixture. Sec 1115B4.3.2 Fig 11B–1D.

Lavatories shall be mounted with the rim or counter surface no higher than 34" above the finished floor and with a clearance of at least 29" from the floor to the bottom of the apron with knee clearance under the front lip extending a minimum of 30" in width and 8" minimum depth at the top. Toe clearance shall be the same width and shall be a minimum of 9" high from the floor and a minimum of 17" deep from the front of the lavatory. Sec 1115B.4.3.2, Fig. 11B–1D

Hot water and drain pipes accessible under lavatories shall be insulated or otherwise covered. There shall be no sharp or abrasive surfaces under lavatories. Sec 1115B.4.3.4

Controls for water closet flush valves shall be mounted on the wide side of toilet areas. Sec 1115B4.1.5

Water closet and urinal flush valve controls, and faucet controls and operating mechanism controls, shall be operable with one hand, shall not require tight grasping, pinching, or twisting of the wrist, and shall be mounted no more than 44" above the floor. The force required to activate controls shall be no greater than 5 pound–force (lbf). Electronic or automatic flushing controls are acceptable and preferable. Sec. 1115B.4.1.5

Self–closing faucet control valves are allowed if the faucet remains open for at least 10 seconds. Faucets shall comply with Survey Form 24: Controls and Operating Mechanisms – 1115B4.3.1

Mirrors shall be mounted with the bottom edge no higher than 40" from the floor. Sec 1115B.8.1

Where towel, sanitary napkins, waste receptacles, and other similar dispensing and disposal fixtures are provided, at least one of each type shall be located with all operable parts, including coin slots, within 40" from the finished floor. Sec 1115B.8.3

Toilet tissue dispensers shall be located on the wall within 12" of the front edge of the toilet seat and no lower than 19" from the floor. Dispensers that control delivery or that do not permit continuous paper flow shall not be used. Sec 1115B.8.4 Fig 11B–1A.

Urinals, at least one shall have a clear floor space 30 inches by 48 inches (762 mm by 1219 mm) in front of the urinal to allow forward approach. This clear space shall comply with Section 1118B.4. Sec 1115B.4.2.3

In other than dwelling units, toilet room floors shall have a smooth, hard, nonabsorbent surface such as Portland cement, concrete, ceramic tile or other approved material which extends upward onto the walls at least 5". Walls within water closet compartments and walls with 24" of the front and sides of urinals shall be similarly finished to a height of 48" and, except for structural elements, the materials used in such walls shall be a type which is not adversely affected by moisture. Sec 1115B.3.1.6

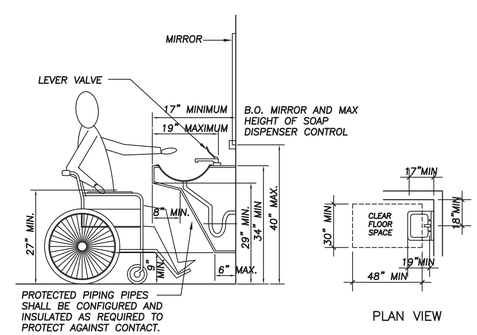

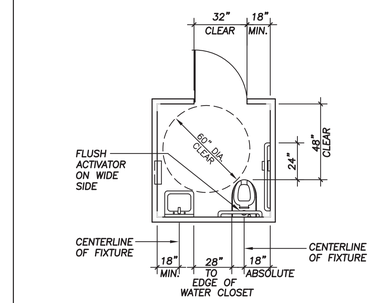

SINGLE OCCUPANCY TOILET

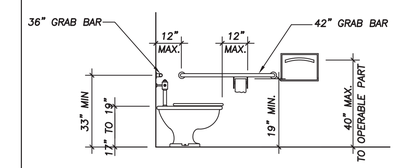

SIDE ELEVATION

FIGURE 11B-1A

SANITARY FACILITIES

SCALE:	1
NONE	

REV	DESCRIPTION	DWN	CHK	APP	DATE
A	100% SUBMITTAL	BP	JM	–	11.30.11

LOS ANGELES
DEPARTMENT OF WATER AND POWER

HAYNES GENERATING STATION
UNITS 11-16

Kiewit

Kiewit Power
9401 Renner Boulevard
Lenexa, Kansas 66219

STRUCTURAL ENGINEERS:
J. MILCZEWSKY and ASSOCIATES
3275 E. DATE ST.
BREA, CA. 92823
(714) 335-1289 BUS
(714) 494-8012 FAX

JOB NUMBER 10–048

SANITARY FACILITIES FIXTURES

SCALE:	2
NONE	

REGISTERED PROFESSIONAL ENGINEER
JUERGEN MILCZEWSKY
No. S2450
EXP. 3-31-13
STRUCTURAL
STATE OF CALIFORNIA

DWP DRAWING NUMBER

CONTROL BUILDING
ACCESSIBILITY DETAILS

DESIGNED	–
DRAWN	BAP
CHECKED	JAM
APPROVED	–

DRAWING NUMBER
AC1.1

990-ST-0015-001 - Packet 990-011 - Haynes 5 & 6 Repowering - 2010017 - Received: 11/22/2011